King Square

ZADP5ML-18 Z-Axis Pipetting Module

Integrated Z-axis air-pump module for the 5 mL product series.



Technical specifications

Power supply	DC24V,peak current 1000 mA
Connector	16pinFFC
Communication	RS-485/CAN
Signal output	One open-collector output for liquid-level detection
Operating environment	Temperature 15 °C-35 °C, RH 20%-85%non-condensing
Effective travel	180 mm Z-axis travel. Plunger travel 64 mm total, 57 mm effective
Maximum speed	5 mL/S
Rated full-travel life	1,000,000 cycles at rated pipetting accuracy
Dimensions and mass	height 307 mm, width 153 mm, depth 17 mm, mass 950 g (single Z-axis pump)

Product features

- Capacitive and pressure-based liquid-level detection.
- Air-path blockage detection.
- Detects aspiration of air.
- Monitors tip status during the liquid-handling cycle.
- Active disposable tip ejection.
- Disposable tips help limit sample carryover.
- Designed for low-noise operation.

Pipetting performance

Operating mode	Tip capacity	Test volume	Precision (CV)	Accuracy
Single aspiration / single dispense	5 mL	10 µL	≤3%	±5%
Single aspiration / single dispense	5 mL	50 µL	≤2.5%	±4%
Single aspiration / single dispense	5 mL	500 µL	≤1%	±2%
Single aspiration / single dispense	5 mL	1000 µL	≤1%	±1.5%
Single aspiration / single dispense	5 mL	3000 µL	≤1%	±1%
Single aspiration / single dispense	5 mL	5000 µL	≤0.5%	±1%
Single aspiration / multiple dispenses	5 mL	50 µL	≤3.5%	±5%
Single aspiration / multiple dispenses	5 mL	500 µL	≤2%	±2%

Dimension drawing

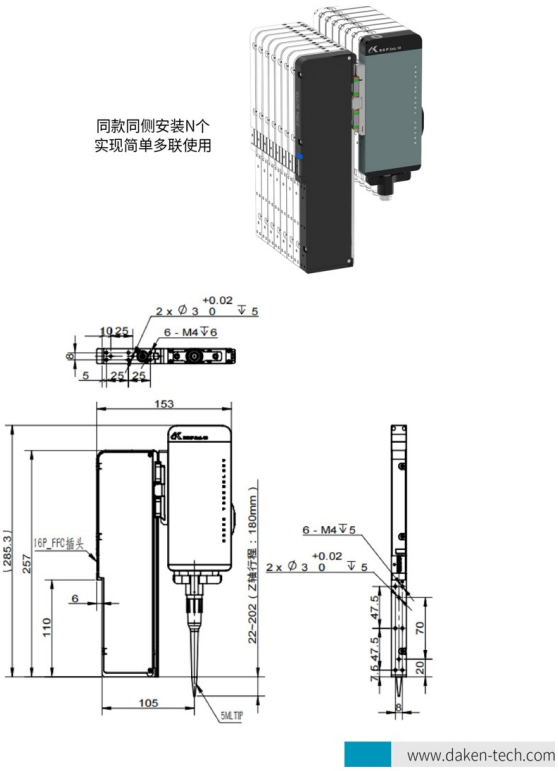

www.daken-tech.com